DaoSafe

DATASHEET

Tripod Turnstile

DS101

SINGLE / BI-DIRECTION

SAFETY LEVEL

AESTHETICS

COSTING

Description

- Tripod turnstiles are compact and cost-effective entrance/exit security solutions.
- The body is made of brushed stainless steel which is robust, rigid, anti-rust, waterproof and durable.
- It is ideal for both indoor and outdoor settings.
- It has standard relay signal, which can be integrated with any kind of third-party access control system (e.g.: RFID, Fingerprint and Biometric reader device).
- It supports any type of external device solution. (e.g.: Display, Counter, Reader, Face recognition, Push button, Card collector, RFID Wristband Collector, Coin insert, Barcode/QR reader, Wheel).
- In case of emergency, tripod turnstile horizontal arms will drop down automatically to allow free passage when power off.
- Anti-tailing function: only one person passes at one time.
- It is suitable for areas with general pedestrian traffic. (e.g.: Park, School, Factory, Library, Cinema, and Gym…).

Features

- ✓ Long-life performance, high operation dependability and fast response.
- ✓ The whole system runs smoothly, low noise, no mechanical impact.
- ✓ Single directional or Bi-directional is selectable.
- ✓ Automatic reset function: turnstile arm will lock automatically within 5s (can be setting) if passenger delay to entry.
- ✓ When power is off, arms will drop down automatically, which is complying with fire safety requirements.
- ✓ LED indicator ((red × means no entry; green → means entry).
- ✓ Easy to install and maintain.
- ✓ 3-year warranty support.

We don't only offer turnstile gates
We offer full access control solutions

Specification

Model No.	DS101
Type	Tripod Turnstile
Brand	Daosafe
Framework Material	304 full stainless steel
Arm material	Stainless Steel
Dimension	1200 * 280 * 1000mm
Net Weight	55kg/pcs
Passage Width	550mm (Arm length: 500mm)
Passing Direction	Single directional / Bi-directional
MCBF	5 million
Power Supply	AC220V/110V, 50/60Hz
Operation Voltage	24V DC
Power Consumption	20W
Operation Temperature	-20 ˚C – 75 ˚C
Operation Humidity	0 ~ 95% (No freeze)
Working Environment	Indoor / Outdoor
Flow Rate	35-40people per minute
LED Indicator	Yes
Emergency	Automatic arm open when power off
Communication	Dry contact, Relay signal, RS485

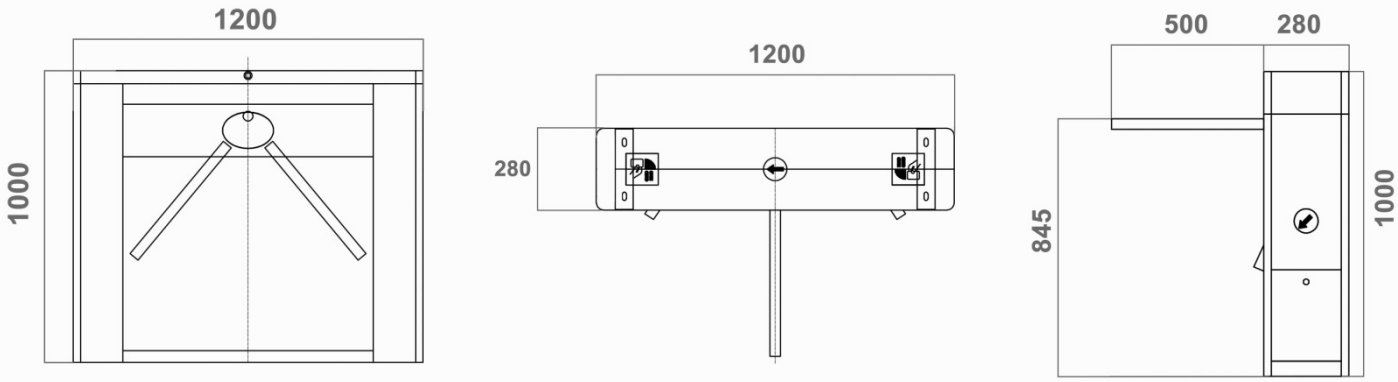

Integrate With Any Access Control

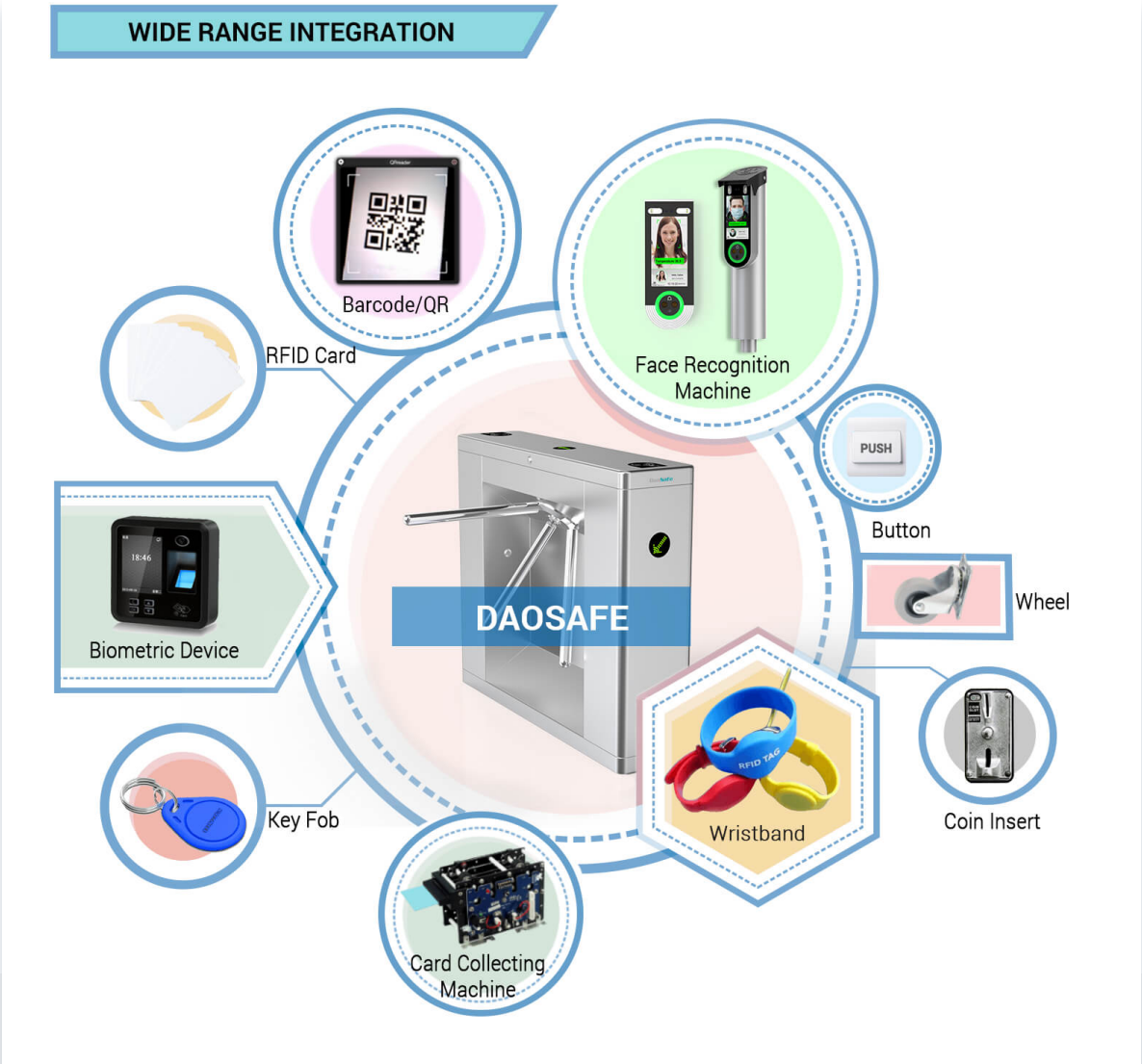

- **Face Recognition**

  Dynamic face recognizes, non-contact and trendy solutions

- **Barcode /QR scanner**

  Connect with mini PC or access controller to use

  Support phone or paper Barcode/QR

- **RFID Card**

  All kinds of RFID card reader, such as

  Mifare, EM cards, HID card, Key Fob, Wristband…

- **Biometric Device**

  Support Fingerprint, RFID card, password

  Popular and secure access control solutions

- **Key Fob**

  RFID type, mainly use in apartment

- **Card Collector Machine**

  The solution is mainly used in park, building for visitor

- **Wristband**

  RFID type, mainly used in swing pool and gym

- **Coin Insert**

  The solution is mainly for bus stations or toilet

- **Wheel**

  Integrated on turnstile for movable and portable

- **Button**

  Exit by freely passing/ push button

- **3rd Party Access Controller**

  Any 3rd party access controller can integrate

  with all our turnstiles

DS101

Working With

DSSP6002A Security Gate

Tripod Turnstile DS101 is not just the most sturdy type, it can also be used indoor and outdoor; Flexibly match up DSSP6002A Pedestrian Security Gate, apply in various entrance/exit access control solutions.

DS101

Working With

DSSP6002A Security Gate

System Integration Figure

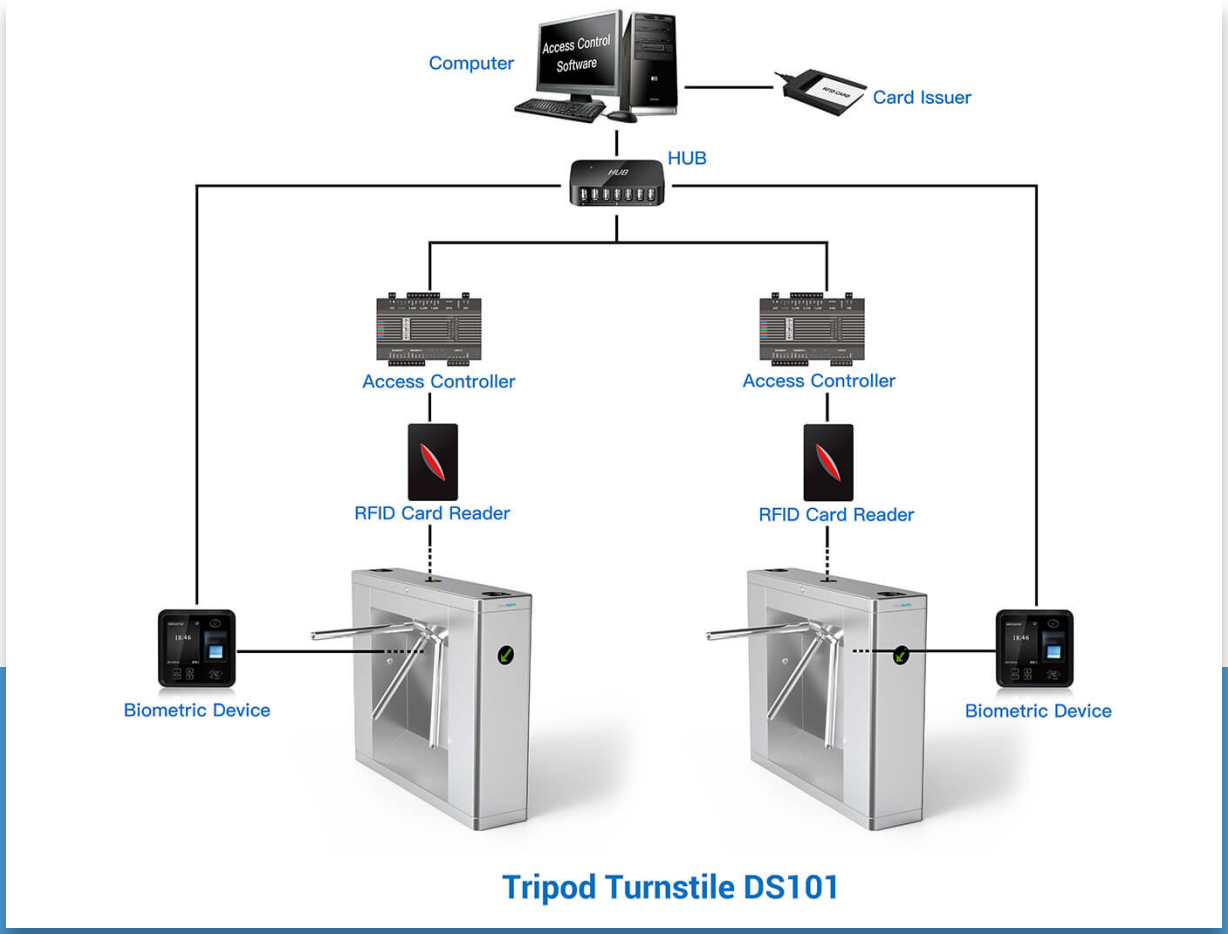

REMARK:

- The turnstile circuit board support to work with any relay signal, and support to integrated with any 3rd party access control system: RFID, BIOMETRIC, QR/BARCODE and so on.
- Multiple access controller board can be connected by TCP/IP through net cable, control by central computer.
- The turnstile circuit board is also with RS232 output, it can connect with mini PC. Turnstile will open once received simple code by computer, which is suitable for the complicated like ticketing system solution.

Tripod turnstile is the simple type, with the lowest price in all type turnstiles. The most obvious feature is that only one person can pass at one time. The turnstile is usually used in sites that pedestrian flow rate is relative small.

One Lane

Two Lanes

Three Lanes