DS-2DY9236I-CWX(W/316L)
2MP 36× IR Explosion-Proof Positioning System

II 2 G Ex db IIC T6 Gb
II 2 D Ex tb IIIC T80°C Db

Hikvision DS-2DY9236I-CWX(W/316L) 2MP 36× IR Explosion-Proof Positioning System adopts 1/1.8" progressive scan CMOS chip. With the 36× optical zoom lens, the positioning system offers more details over expansive areas.

The explosion-proof positioning system is equipped with explosion-proof enclosure made of stainless steel. It can be widely used in the scenes such as port, wharf, petrochemical industry, and military industry, etc.

Key Features

- 1/1.8" progressive scan CMOS
- Up to 1920 × 1080@30fps resolution
- Min. illumination:
  Color: 0.002 Lux @(F1.5, AGC ON)
  B/W: 0.0002 Lux @(F1.5, AGC ON)
  0 Lux with IR
- 36× optical zoom, 16× digital zoom
- 120 dB WDR, HLC, BLC, 3D DNR, Defog, EIS, Regional Exposure, Regional Focus
- Up to 150 m IR distance
- Explosion-proof certificate: TUV 17 ATEX 8118, IECEx TUR 17.0049
- Support H.265+/H.265 video compression

Specification

Camera Module	
Image Sensor	1/1.8" progressive scan CMOS
Min. Illumination	Color: 0.002 Lux @(F1.5, AGC ON) B/W: 0.0002 Lux @(F1.5, AGC ON) 0 Lux with IR
White Balance	Auto/Manual/ATW (Auto-tracking White Balance)/Indoor/Outdoor/Fluorescent Lamp/Sodium Lamp
Gain	Auto/Manual
Shutter Time	50Hz: 1/1 s to 1/30,000 s 60Hz: 1/1 s to 1/30,000 s
Day & Night	IR Cut Filter
Digital Zoom	16×
Privacy Mask	24 programmable privacy masks
Focus Mode	Auto/Semi-automatic/Manual
WDR	120 dB WDR
Lens	
Focal Length	5.7 mm to 205 mm, 36× optical zoom
Zoom Speed	Approx. 4.4 s (optical lens, wide-tele)
Field of View	Horizontal field of view: 59.8° to 2.0° (wide-tele) Vertical field of view: 35° to 1.1° (wide-tele) Diagonal field of view: 66.2° to 2.3° (wide-tele)
Working Distance	10 mm to 1500 mm (wide-tele)
Aperture Range	F1.5 to F4.5
IR	
IR Distance	150 m
Smart IR	Support
PTZ	
Movement Range (Pan)	360° endless
Pan Speed	Configurable, from 0.1°/s to 50°/s, Preset speed: 50°/s
Movement Range (Tilt)	From -90° to 90° (auto-flip)
Tilt Speed	Configurable, from 0.1°/s to 40°/s Preset Speed: 40°/s
Proportional Zoom	Support
Presets	300
Patrol Scan	8 patrols, up to 32 presets for each patrol
Pattern Scan	4 pattern scans, record time over 10 minutes for each scan
Power-off Memory	Support
Park Action	Preset/Pattern Scan/Patrol Scan/Auto Scan/Tilt Scan/Random Scan/Frame Scan/Panorama Scan
3D Positioning	Support
PTZ Position Display	Support
Preset Freezing	Support
Scheduled Task	Preset/Pattern Scan/Patrol Scan/Auto Scan/Tilt Scan/Random Scan/Frame Scan/Panorama Scan/Dome Reboot/Dome Adjust/Aux Output
Compression Standard	
Video Compression	Main Stream: H.265+/H.265/H.264+/H.264 Sub-stream: H.265/H.264/MJPEG Third Stream: H.265/H.264/MJPEG
H.264 Type	Baseline Profile/Main Profile/High Profile

H.264+	Support
H.265 Type	Main Profile
H.265+	Support
Video Bitrate	32 Kbps to 16384 Kbps
Audio Compression	G.711alaw/G.711ulaw/G.722.1/G.726/MP2L2/PCM
Audio Bitrate	64 Kbps (G.711)/16 Kbps (G.722.1)/16 Kbps (G.726)/32 Kbps to 192 Kbps (MP2L2)
SVC	Support
Smart Features	
Basic Event	Motion Detection, Alarm Input, Alarm Output, Video Tampering Detection, Exception
Smart Event	Face Detection, Audio Exception Detection, Intrusion Detection, Line Crossing Detection, Region Entrance Detection, Region Exiting Detection
Smart Record	Dual-VCA
ROI	Main stream, sub-stream, and third stream respectively support four fixed areas.
Image	
Max. Resolution	1920 × 1080
Main Stream	50Hz: 25fps (1920 × 1080, 1280 × 960, 1280 × 720) 50fps (1920 × 1080, 1280 × 960, 1280 × 720) 60Hz: 30fps (1920 × 1080, 1280 × 960, 1280 × 720) 60fps (1920 × 1080, 1280 × 960, 1280 × 720)
Sub-Stream	50Hz: 25fps (704 × 576, 640 × 480, 352 × 288) 50fps (704 × 576, 640 × 480, 352 × 288) 60Hz: 30fps (704 × 480, 640 × 480, 352 × 240) 60fps (704 × 480, 640 × 480, 352 × 240)
Third Stream	50Hz: 25fps (1920 × 1080, 1280 × 960, 1280 × 720, 704 × 576, 640 × 480, 352 × 288) 50fps (1920 × 1080, 1280 × 960, 1280 × 720, 704 × 576, 640 × 480, 352 × 288) 60Hz: 30fps (1920 × 1080, 1280 × 960, 1280 × 720, 704 × 480, 640 × 480, 352 × 240) 60fps (1920 × 1080, 1280 × 960, 1280 × 720, 704 × 480, 640 × 480, 352 × 240)
Image Enhancement	HLC/BLC/3D DNR/Defog/EIS/Regional Exposure/Regional Focus
Network	
Network Storage	Built-in memory card slot, support Micro SD/SDHC/SDXC, up to 256 GB; NAS (NPS, SMB/CIPS)
Alarm Linkage	Alarm actions, such as Notify Surveillance Center, Upload to FTP, Send Email, Trigger Recording, Recording Linkage, and Alarm Input, etc.
Protocols	IPv4/IPv6, HTTP, HTTPS, 802.1x, Qos, FTP, SMTP, UPnP, SNMP, DNS, DDNS, NTP, RTSP, RTCP, RTP, TCP/IP, UDP, IGMP, ICMP, DHCP, PPPoE, Bonjour
API	Open-ended, support ONVIF, ISAPI, and CGI, support HIKVISION SDK and Third-Party Management Platform
Simultaneous Live View	Up to 20 channels
User/Host	Up to 32 users 3 levels: Administrator, Operator and User
Security Measures	User authentication (ID and PW), Host authentication (MAC address); HTTPS encryption; IEEE 802.1x port-based network access control; IP address filtering
Client	iVMS-4200, iVMS-4500, iVMS-5200, Hik-Connect
Web Browser	IE 8 to 11, Chrome 31.0 to 44, Firefox 30.0 to 51
Interface	
Alarm Interface	7-ch alarm input and 2-ch alarm output
Audio Interface	1-ch audio input and 1-ch audio output
Network Interface	1 RJ45 10 M/100 M Ethernet
BNC	1.0V [p-p]/75 Ω, NTSC (or PAL) composite
General	
Power	100 VAC to 240 VAC Max.: 100 W (Max. 15 W for IR)
Working Temperature	-40°C to 60°C (-40°F to 140°F)
Working Humidity	≤ 95%

Protection Level	IP68 Standard, TVS 6000V Lightning Protection, Surge Protection and Voltage Transient Protection
Material	SUS316L
Explosion-proof	TUV 17 ATEX 8118: Ex db IIC T6 Gb/Ex tb IIIC T80°C Db IECEx TUR 17.0049: Ⓔx II 2 G Ex db IIC T6 Gb/Ⓔx II 2 D Ex tb IIIC T80°C Db For explosive gas atmospheres, the maximum surface temperature is 85°C; For flammable dust atmospheres, the maximum surface temperature is 80°C; IIC: for explosive gas atmospheres other than mines susceptible to firedamp; For explosive gas mixture atmospheres: Zone 1, Zone 2, Zone 21, Zone 22.
Dimensions	445 mm × 245 mm × 510 mm (17.52" × 9.65" × 20.08")
Weight	Approx. 36.7 kg (80.91 lb)

DORI

The DORI (detect, observe, recognize, identify) distance gives the general idea of the camera ability to distinguish persons or objects within its field of view.

It is calculated based on the camera sensor specification and the criteria given by EN 62676-4: 2015.

DORI	Detect	Observe	Recognize	Identify
Definition	25 px/m	63 px/m	125 px/m	250 px/m
Distance (Tele)	2154.7 m (7067.4 ft)	855.0 m (2804.4 ft)	430.9 m (1413.4 ft)	215.5 m (706.84 ft)

Available Model

DS-2DY9236I-CWX(W/316L), 100 VAC to 240 VAC

Dimensions

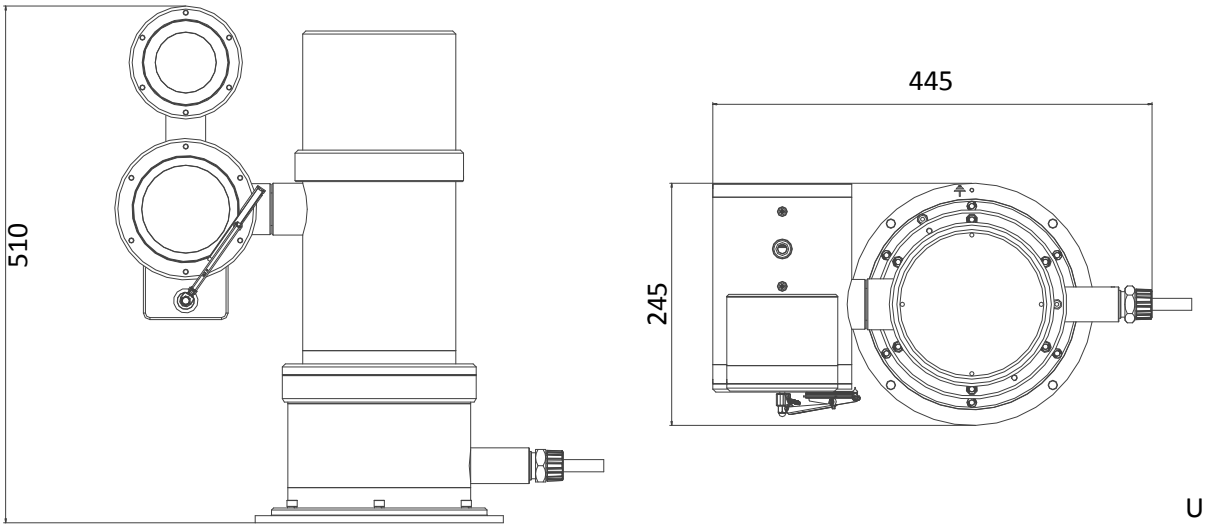

Unit: mm

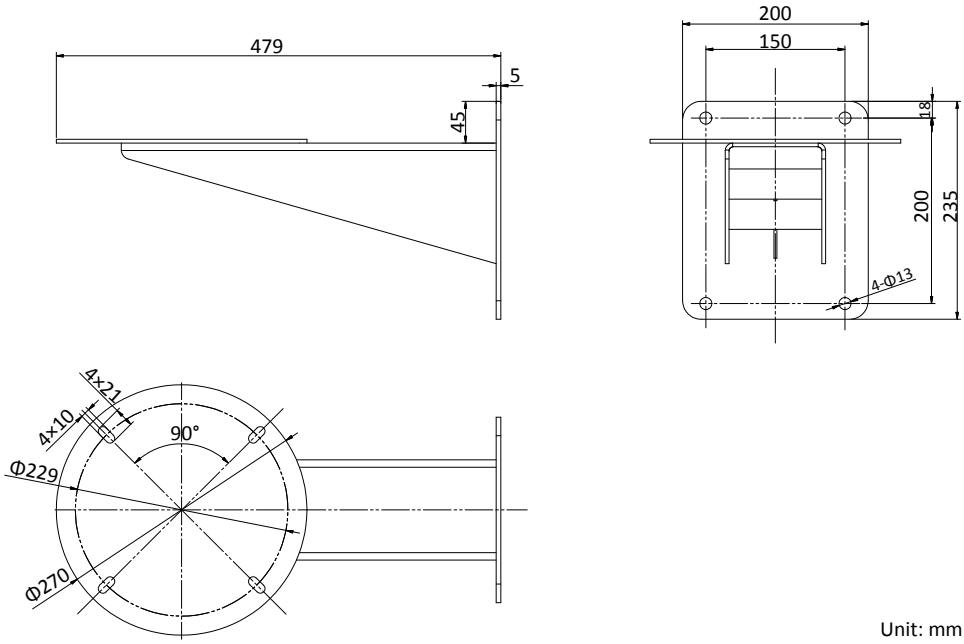

Unit: mm

Accessories Included

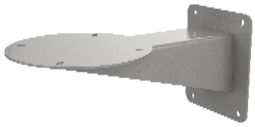

DS-1713ZJ-Y-AC(OS) Wall mount

Optional

DS-1677ZJ-XS-1.0 (D) Flexible conduit

DS-2780ZJ-X/316L(OS) Explosion-proof terminal box

Distributed by

S.E.A SALES & SERVICES (S) PTE LTD

362 Upper Paya Lebar Road, #02-14 Da Jin Factory Building, Singapore 534963

(65) 6926 7688 (65) 6926 7689

info@seasingapore.com.sg

www.seasingapore.com.sg

S.E.A South East Asia Group

One Stop Solutions Provider

HIKVISION

Headquarters
No.555 Qianmo Road, Binjiang District,
Hangzhou 310051, China
T +86-571-8807-5998
overseasbusiness@hikvision.com

Hikvision USA
T +1-909-895-0400
sales.usa@hikvision.com

Hikvision Europe
T +31-23-5542770
sales.eu@hikvision.com

Hikvision UK & Ireland
T +01628-902140
sales.uk@hikvision.com

Hikvision UAE
T +971-4-4432090
salesme@hikvision.com

Hikvision Russia
T +7-495-669-67-99
saleru@hikvision.com

Hikvision Australia
T +61-2-8599-4233
salesau@hikvision.com

Hikvision Italy
T +39-0438-6902
info.it@hikvision.com

Hikvision South Africa
Tel: +27 (10) 0351172
sale.africa@hikvision.com

Hikvision Singapore
T +65-6684-4718
sg@hikvision.com

Hikvision Korea
T +82-(0)31-731-8817
sales.korea@hikvision.com

Hikvision India
T +91-22-28469900
sales@pramahikvision.com

Hikvision Brazil
T +55 11 3318-0050
Latam.support@hikvision.com

Hikvision France
T +33(0)1-85-330-450
info.fr@hikvision.com

Hikvision Spain
T +34-91-737-16-55
info.es@hikvision.com

Hikvision Poland
T +48-22-460-01-50
info.pl@hikvision.com

Hikvision Canada
T +1-866-200-6690
sales.canada@hikvision.com

Hikvision Turkey
T +90 (216)521 7070- 7074
sales.tr@hikvision.com

Hikvision Kazakhstan
T +7-727-9730667
nikia.panfilov@hikvision.ru

Hikvision Tashkent
T +99-87-1238-9438
uzb@hikvision.ru

Hikvision Indonesia
T +62-21-2933759
Sales.Indonesia@hikvision.com

Hikvision Thailand
T +662-275-9949
sales.thailand@hikvision.com

Hikvision Malaysia
T +601-7652-2413
sales.my@hikvision.com

Hikvision Vietnam
T +84-974270888
sales.vt@hikvision.com

Hikvision Hong Kong
T +852-2151-1761
info.hk@hikvision.com

Hikvision Colombia
sales.colombia@hikvision.com

© Hikvision Digital Technology Co., Ltd. 2020 | Data subject to change without notice | 05050320201231