DS-2DE4215IW-DE (S5)
2 MP 15 × IR Network Speed Dome

Hikvision DS-2DE4215IW-DE (S5) 2 MP 15 × IR Network Speed Dome adopts 1/2.8" progressive scan CMOS chip. With the 15 × optical zoom lens, the camera offers more details over expansive areas.
This series of cameras can be widely used for wide ranges of high-definition, such as the rivers, roads, railways, airports, squares, parks, scenic spots, and venues, etc.

- Accurate human and vehicle target classification and alarm based on deep learning algorithm
- Support face capture. Up to 5 faces captured at the same time
- 1/2.8" Progressive Scan CMOS
- Up to 1920 × 1080 @30fps resolution
- Excellent low-light performance with powered-by-DarkFighter technology
- 15 × optical zoom, 16 × digital zoom
- WDR, HLC, BLC, 3D DNR, Defog, Regional Exposure, Regional Focus
- Up to 100 m IR distance
- 12VDC & POE (802.3at)
- Support H.265+/H.265 video compression

▪ Specification

Camera Module	
Image Sensor	1/2.8" progressive scan CMOS
Min. Illumination	Color: 0.005Lux @ (F1.6, AGC ON); B/W: 0.001Lux @ (F1.6, AGC ON), 0 Lux with IR
Shutter Speed	1/1 s to 1/30000 s
Slow Shutter	yes
Focus	semi-auto, manual, auto
Day & Night	ICR
Day/Night Switch	auto
BLC	yes
WDR	120 dB WDR
HLC	yes
3D DNR	yes
Defog	yes
EIS	yes
Regional Exposure	yes
Regional Focus	yes
Image Settings	saturation, brightness, contrast, sharpness
White Balance	auto, ATW, sodium lamp, fluorescent lamp, indoor, outdoor, MWB, Locked WB
Digital Zoom	16 ×
Optical Zoom	15 ×
Privacy Mask	up to 24 masks,polygon region ,mosaic mask ,mask color configurable
SNR	> 52dB
Lens	
Focal Length	5 mm to 75 mm, 15 × Optical
Zoom Speed	approx.2.3s
FOV	Horizontal field of view: 53.8° to 4° (wide-tele), Vertical field of view: 31.9° to 2.3° (wide-tele), Diagonal field of view: 60.4° to 4.6° (wide-tele)
Aperture	F1.6
PTZ	
Movement Range (Pan)	360°
Movement Range (Tilt)	-15° to 90°(auto flip)
Pan Speed	pan speed: configurable from 0.1° to 80°/s; preset speed: 80°/s
Tilt Speed	tilt speed: configurable from 0.1° to 80°/s, preset speed 80°/s
Proportional Zoom	yes
Presets	300
Patrol Scan	8 patrols, up to 32 presets for each patrol
Pattern Scan	4 pattern scans
Power-off Memory	yes
Park Action	preset, pattern scan, patrol scan, auto scan, tilt scan, random scan, frame scan, panorama scan
3D Positioning	yes
PTZ Status Display	yes
Preset Freezing	yes
Scheduled Task	preset, pattern scan, patrol scan, auto scan, tilt scan, random scan, frame scan, panorama scan, dome reboot, dome adjust, aux output
Video	
Max. Resolution	1920 × 1080
Stream Type	main stream, sub-stream, third stream
Main Stream	50Hz: 25fps (1920 × 1080, 1280 × 960, 1280 × 720) 60Hz: 30fps (1920 × 1080, 1280 × 960, 1280 × 720)
Sub-Stream	50Hz: 25fps (704 × 576, 640 × 480, 352 × 288) 60Hz: 30fps (704 × 480, 640 × 480, 352 × 240)
Third Stream	50Hz: 25fps (1920 × 1080, 1280 × 960, 1280 × 720, 704 × 576, 640 × 480, 352 × 288) 60Hz: 30fps (1920 × 1080, 1280 × 960, 1280 × 720, 704 × 480, 640 × 480, 352 × 240)
Video Compression	H.265, H.264, MJPEG
Video Bit Rate	32 kbps to 16384 kbps
H.264 Type	baseline profile, main profile, high profile

H.265 Type	main profile
H.264+	yes
H.265+	yes
SVC	yes
ROI	dynamic face tracking, fixed region, main stream, sub-stream and third stream respectively support eight fixed areas
Audio	
Audio Compression	G.711alaw, G.711ulaw, G.722.1, G.726, MP2L2, PCM
Audio Bit rate	MP2L2: 32 kbps, 40 kbps, 48 kbps, 56 kbps, 64 kbps, 80 kbps, 96 kbps, 112 kbps, 128 kbps, 144 kbps, 160 kbps, 192 kbps
Audio Sampling Rate	MP2L2: 16 kHz, 32 kHz, 48 kHz, PCM: 8 kHz, 16 kHz, 32 kHz, 48 kHz
Environment Noise Filtering	yes
Smart Features	
Face Capture	yes
Basic Event	audio exception, motion detection, video tampering alarm, exception
Smart Event	intrusion detection, line crossing detection, region entrance detection, region exiting detection, unattended baggage detection, object removal detection
Smart Record	ANR, Dual-VCA
Alarm Linkage	preset, patrol scan, pattern scan, memory card video recording, alarm output, sending email, notify surveillance center, upload to FTP
Perimeter Protection	Line crossing, intrusion, region entrance, region exiting Support alarm triggering by specified target types (human and vehicle)
Network	
Network Storage	NAS (NFS, SMB/ CIFS), ANR
Protocols	IPv4/IPv6, HTTP, HTTPS, 802.1x, Qos, FTP, SMTP, UPnP, SNMP, DNS, DDNS, NTP, RTSP, RTCP, RTP, TCP/IP, UDP, IGMP, ICMP, DHCP, PPPoE, Bonjour
API	ISAPI, Hikvision SDK, Hik-Connect, ONVIF (Profile S, Profile G, Profile T), ISUP
Simultaneous Live View	20
User/Host	32
Smooth Streaming	yes
Security Measures	Authenticated username and password, MAC address binding, HTTPS encryption, 802.1X authenticated access, IP address filter
Client	iVMS-4200, Hik-Connect
Web Browser	IE 8 to 11, Chrome 57+, Firefox 52+, Safari 12+
Interface	
Communication Interface	RJ45, self-adaptive 10M/100M Ethernet port
On-board Storage	support microSD/microSDHC/microSDXC cards, up to 256 GB
Alarm Input	1 alarm input
Alarm Output	1 alarm output
Audio Input	1 audio input, 2.0 to 2.4Vp-p, 1k Ohm±10%,
Audio Output	1 audio output, line level, impedance: 600 Ω
Supplement Light	
IR Distance	100 m
General	
Power	12 VDC, PoE (802.3at)
Power Consumption and Current	Max. 24 W, including max. 9 W for supplement light
Operating Conditions	-30°C to 65°C (-22°F to 149°F); humidity lower than 90%RH
Reset	yes
Material	ADC 12, PC, PC+10% GF
Dimensions	Φ 164.5 mm × 290 mm (Φ 6.48" × 11.42")
Weight	Approx. 2 kg (4.41 lb)
Approval	
Protection	IP66, 4000V Lightning Protection, Surge Protection and Voltage Transient Protection

▪ DORI

The DORI (detect, observe, recognize, identify) distance gives the general idea of the camera ability to distinguish persons or objects within its field of view. It is calculated based on the camera sensor specification and the criteria given by EN 62676-4: 2015.

DORI	Detect	Observe	Recognize	Identify
Definition	25 px/m	63 px/m	125 px/m	250 px/m
Distance(Tele)	960 m (3149.6 ft)	381.0 m (1250.0 ft)	192.0 m (630.0 ft)	96.0 m (315.0 ft)

▪ Dimension

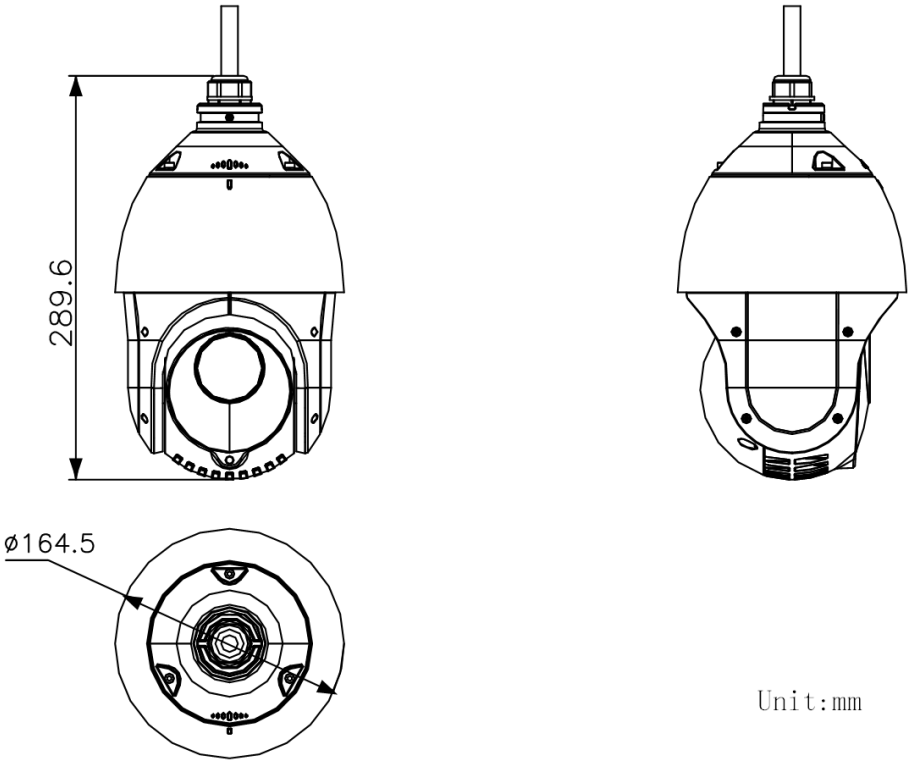

▪ Accessory

▪ Included

DS-1618ZJ
Wall Mount

ASW0081-1220002W

▪ Optional

DS-1682ZJ
Extendable Pole for
Pendant Mount

DS-1602ZJ
Wall Mount

DS-1604ZJ-box
Wall mount with
junction box

DS-1604ZJ
Wall mount with
junction box

DS-1604ZJ-BOX-CORNER
Wall Mount with

DS-1604ZJ-pole
Vertical Pole Mount

DS-1604ZJ-BOX-POLE
Vertical Pole Mount with

DS-1604ZJ-corner
Corner Mount

junction box

DS-1661ZJ
Pendant Mount

DS-1662ZJ
Pendant Mount

junction box

DS-1663ZJ
Ceiling Mount

DS-1673ZJ
Horizontal Pole Mount

DS-1681ZJ
Installation Adapter

DS-1619ZJ
Gooseneck Mount

DS-1660ZJ
Parapet wall mount

DS-1667ZJ
Extendable Pole for
Pendant Mount

DS-1100KI
Network Keyboard

LAS60-57CN-RJ45
Hi-PoE midspan

DS-1005KI
USB Joy-stick

**DS-1673ZJ should be used with DS-1661ZJ or DS-1602ZJ.*

▪ Available Model

DS-2DE4215IW-DE (S5)

Distributed by

S.E.A SALES & SERVICES (S) PTE LTD

362 Upper Paya Lebar Road, #02-14 Da Jin Factory Building,
Singapore 534963
(65) 6926 7688 (65) 6926 7689
info@seasingapore.com.sg
www.seasingapore.com.sg

S.E.A
South East Asia Group

BUSINESS SOLUTIONS
AUTHORISED CHANNEL PARTNER

One Stop Solutions Provider

Headquarters
No.555 Qianmo Road, Binjiang District,
Hangzhou 310051, China
T +86-571-8807-5998
overseasbusiness@hikvision.com

Hikvision USA
T +1-909-895-0400
sales.usa@hikvision.com

Hikvision Europe
T +31-23-5542770
sales.eu@hikvision.com

Hikvision UK & Ireland
T +01628-902140
sales.uk@hikvision.com

Hikvision UAE
T +971-4-4432090
salesme@hikvision.com

Hikvision Russia
T +7-495-669-67-99
saleru@hikvision.com

Hikvision Australia
T +61-2-8599-4233
salesau@hikvision.com

Hikvision Italy
T +39-0438-6902
info.it@hikvision.com

Hikvision South Africa
Tel: +27 (10) 0351172
sale.africa@hikvision.com

Hikvision Singapore
T +65-6684-4718
sg@hikvision.com

Hikvision Korea
T +82-(0)31-731-8817
sales.korea@hikvision.com

Hikvision India
T +91-22-28469900
sales@pramahikvision.com

Hikvision Brazil
T +55 11 3318-0050
Latam.support@hikvision.com

Hikvision France
T +33(0)1-85-330-450
info.fr@hikvision.com

Hikvision Spain
T +34-91-737-16-55
info.es@hikvision.com

Hikvision Poland
T +48-22-460-01-50
info.pl@hikvision.com

Hikvision Canada
T +1-866-200-6690
sales.canada@hikvision.com

Hikvision Turkey
T +90 (216)521 7070- 7074
sales.tr@hikvision.com

Hikvision Kazakhstan
T +7-727-9730667
nikia.panfilov@hikvision.ru

Hikvision Tashkent
T +99-87-1238-9438
uzb@hikvision.ru

Hikvision Indonesia
T +62-21-2933759
Sales.Indonesia@hikvision.com

Hikvision Thailand
T +662-275-9949
sales.thailand@hikvision.com

Hikvision Malaysia
T +601-7652-2413
sales.my@hikvision.com

Hikvision Vietnam
T +84-974270888
sales.vt@hikvision.com

Hikvision Hong Kong
T +852-2151-1761
info.hk@hikvision.com

Hikvision Colombia
sales.colombia@hikvision.com

© Hikvision Digital Technology Co., Ltd. 2020 | Data subject to change without notice |