DS-2DE3A204IW-DE/W (2.8-12 mm)
2 MP 4× IR Wi-Fi Network PTZ Camera

Hikvision DS-2DE3A204IW-DE/W (2.8-12 mm) 2MP 4× IR Wi-Fi Network PTZ Camera can be widely used in multiple indoor and outdoor scenes, such as the corridor, office, convenience store, and restaurant, etc.

- Up to 1920 × 1080 resolution
- Excellent low-light performance with powered-by-DarkFighter technology
- Up to 50 m IR distance
- Up to 30 m white light distance
- Support audio visual alarm
- H.265+/H.265 video compression
- Built-in speaker and microphone for audible warning and two-way audio
- Wi-Fi
- White light flashing when alarm triggers
- Remote control on mobile phone via Hik-Connect
- Extendable on-board storage (microSD), up to 256 GB
- IP66
- Easy installation

Specifications

Camera Module	
Image Sensor	1/2.8" progressive scan CMOS
Min. Illumination	Color: 0.005 Lux @(F1.5, AGC ON); B/W: 0.001 Lux @(F1.5, AGC ON); 0 Lux with IR
White Balance	Auto/Manual/ATW (Auto-tracking White Balance)/Indoor/Outdoor/Fluorescent Lamp/Sodium Lamp
Gain	Auto/Manual
Shutter Time	1 to 1/30,000 s
Day & Night	IR Cut Filter
Digital Zoom	16 ×
Privacy Mask	24 programmable privacy masks, mask color configurable
Focus Mode	Auto/Semi-automatic/Manual
WDR	120 dB WDR
Lens	
Focal Length	2.8 to 12 mm, 4 × optical zoom
Zoom Speed	Approx. 2 s (optical lens, wide-tele)
Field of View	Horizontal field of view: 100.5° to 32.6° (wide-tele) Vertical field of view: 52.8° to 18.3° (wide-tele) Diagonal field of view: 120.2° to 37.5° (wide-tele)
Working Distance	100 to 1500 mm (wide-tele)
Aperture Range	F1.5 to F2.7
Illuminator	
IR Distance	Up to 50 m
Smart IR	Yes
White Light Distance	Up to 30 m
PTZ	
Movement Range (Pan)	0° to 350°
Pan Speed	Configurable, from 0.1°/s to 60°/s. Preset speed: 65°/s
Movement Range (Tilt)	0° to 90°
Tilt Speed	Configurable, from 0.1°/s to 50°/s. Preset speed: 60°/s
Proportional Zoom	Yes
Presets	300
Patrol Scan	No
Pattern	No
Power-off Memory	Yes
Park Action	Preset
3D Positioning	Yes
PTZ Position Display	ON/OFF
Preset Freezing	Yes
Scheduled Task	Preset/Dome Reboot/Dome Adjust/Aux output

Compression Standard	
Video Compression	Main Stream: H.265+/H.265/H.264+/H.264 Sub-stream: H.265/H.264/MJPEG Third Stream: H.265/H.264/MJPEG
H.264 Type	Baseline profile/main profile/high profile
H.264+	Yes
H.265 Type	Main profile
H.265+	Yes
Video Bitrate	32 Kbps to 16384 Kbps
Audio Compression	G.711alaw/G.711ulaw/G.722.1/G.726/MP2L2/PCM
Audio Bitrate	64 Kbps (G.711)/16 Kbps (G.722.1)/16 Kbps (G.726)/32 Kbps to 192 Kbps(MP2L2)
SVC	Yes
Smart Features	
Basic Event	Motion detection, video tampering detection, alarm input, alarm output, exception (HDD full, HDD error, illegal login, network disconnected, IP address conflict)
Smart Event	Face detection, intrusion detection, line crossing detection, region entrance detection, region exiting detection, object removal detection, unattended baggage detection, audio exception detection
Smart Record	ANR (Automatic Network Replenishment), dual-VCA
Region of Interest	Main stream, sub-stream, and third stream respectively support 4 fixed areas, and dynamic face tracking.
Image	
Max. Resolution	1920 × 1080
Main Stream	50Hz: 25fps (1920 × 1080, 1280 × 960, 1280 × 720) 60Hz: 30fps (1920 × 1080, 1280 × 960, 1280 × 720)
Sub-Stream	50Hz: 25fps (704 × 576, 640 × 480, 352 × 288) 60Hz: 30fps (704 × 480, 640 × 480, 352 × 240)
Third Stream	50Hz: 25fps (1920 × 1080, 1280 × 960, 1280 × 720, 704 × 576, 640 × 480, 352 × 288) 60Hz: 30fps (1920 × 1080, 1280 × 960, 1280 × 720, 704 × 480, 640 × 480, 352 × 240)
Image Enhancement	BLC, HLC, defog, 3D DNR, regional exposure, regional focus
Network	
Network Storage	Built-in memory card slot, support microSD/SDHC/SDXC, up to 256 GB; NAS (NFS, SMB/ CIFS), ANR
Protocols	IPv4/IPv6, HTTP, HTTPS, Qos, FTP, SMTP, UPnP, SNMP, DNS, DDNS, NTP, RTSP, RTCP, RTP, TCP/IP, DHCP, PPPoE, Bonjour
API	Open-ended, support ONVIF, and ISAPI, support HIKVISION SDK and Third-Party Management Platform, support Hik-Connect
Simultaneous Live View	Up to 20 channels
User/Host	Up to 32 users. 3 user levels, administrator, operator and user
Security Measures	User authentication (ID and PW), Host authentication (MAC address); HTTPS encryption; IEEE 802.1x port-based network access control; IP address filtering
Client	iVMS-4200, iVMS-4500, iVMS-5200, Hik-Connect

Web Browser	IE 8-11,Chrome 31+, Firefox 30+, Microsoft Edge 41.16299.726.0
Wi-Fi	
Wireless Standards	IEEE 802.11 b/g/n
Frequency Range	2.4 to 2.483GHz
Channel Bandwidth	20/40MHz
Protocols	DSSS/OFDM
Security	64/128-bit WEP,WPA/WPA2,WPS
Transfer Rates	11b:11Mbps; 11g:54Mbps; 11n:150Mbps
Wireless Range	50 m
Interface	
Audio	1-ch audio input (line in/mic in), 2.0 to 2.4Vp-p, 1k Ohm ± 10%, 1 built-in microphone 1-ch audio output (line out and built-in speaker), line level, impedance: 600Ω, 1 built-in speaker
Built-in Speaker	8 Ω, 2 W. Max sound pressure level: 100 dB (10 cm)
Alarm	1-ch alarm input/1-ch alarm output
Network Interface	1 RJ45 10 M/100 M Ethernet interface
General	
Power	12 VDC, 3.33 A & PoE (802.3at), 42.5 to 57 VDC, 0.6 A Max. 19 W (including max. 2.4 W for IR, 1.2 W for white light flashing)
Working Environment	Temperature: -30°C to 60°C (-22°F to 140°F), humidity: ≤ 90%, no condensing
Protection Level	IP66 standard, 6000V lightning protection, surge protection and voltage transient protection
Material	ADC12 + PC
Dimension	179.3 mm × 120.5 mm × 182 mm (7.06" × 4.74" × 7.16")
Weight	Approx. 1.125 kg (2.48 lb.)

DORI

The DORI (detect, observe, recognize, identify) distance gives the general idea of the camera ability to distinguish persons or objects within its field of view. It is calculated based on the camera sensor specification and the criteria given by EN 62676-4: 2015.

DORI	Detect	Observe	Recognize	Identify
Definition	25 px/m	63 px/m	125 px/m	250 px/m
Distance (Tele)	130.9 m (429.5 ft)	51.9 m (170.3 ft)	26.2 m (86 ft)	13.1 m (43 ft)

Available Models

DS-2DE3A204IW-DE/W (2.8-12mm)

Dimensions

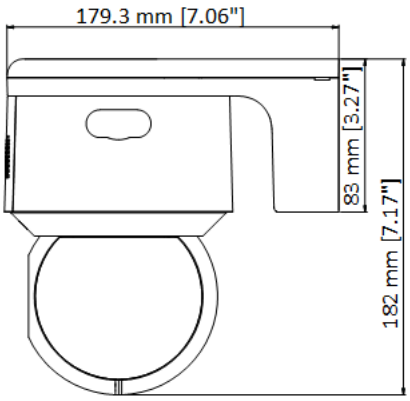

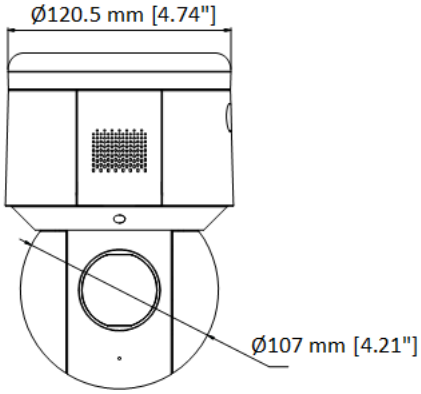

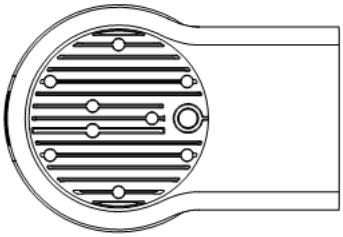

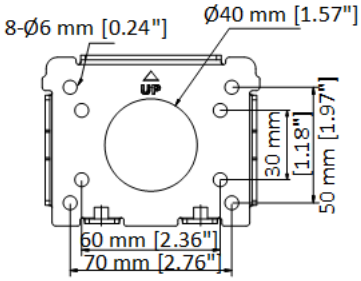

Accessory

Included

Power adapter

Distributed by

S.E.A SALES & SERVICES (S) PTE LTD

362 Upper Paya Lebar Road, #02-14 Da Jin Factory Building,
Singapore 534963

(65) 6926 7688 (65) 6926 7689

info@seasingapore.com.sg

www.seasingapore.com.sg

S.E.A
South East Asia Group

BUSINESS SOLUTIONS
AUTHORIZED CHANNEL PARTNER

One Stop Solutions Provider

Headquarters
No.555 Qianmo Road, Binjiang District,
Hangzhou 310051, China
T +86-571-8807-5998
overseasbusiness@hikvision.com

Hikvision USA
T +1-909-895-0400
sales.usa@hikvision.com

Hikvision Europe
T +31-23-5542770
sales.eu@hikvision.com

Hikvision UK & Ireland
T +01628-902140
sales.uk@hikvision.com

Hikvision UAE
T +971-4-4432090
salesme@hikvision.com

Hikvision Russia
T +7-495-669-67-99
saleru@hikvision.com

Hikvision Australia
T +61-2-8599-4233
salesau@hikvision.com

Hikvision Italy
T +39-0438-6902
info.it@hikvision.com

Hikvision South Africa
Tel: +27 (10) 0351172
sale.africa@hikvision.com

Hikvision Singapore
T +65-6684-4718
sg@hikvision.com

Hikvision Korea
T +82-(0)31-731-8817
sales.korea@hikvision.com

Hikvision India
T +91-22-28469900
sales@pramahikvision.com

Hikvision Brazil
T +55 11 3318-0050
Latam.support@hikvision.com

Hikvision France
T +33(0)1-85-330-450
info.fr@hikvision.com

Hikvision Spain
T +34-91-737-16-55
info.es@hikvision.com

Hikvision Poland
T +48-22-460-01-50
info.pl@hikvision.com

Hikvision Canada
T +1-866-200-6690
sales.canada@hikvision.com

Hikvision Turkey
T +90 (216)521 7070- 7074
sales.tr@hikvision.com

Hikvision Kazakhstan
T +7-727-9730667
nikia.panfilov@hikvision.ru

Hikvision Tashkent
T +99-87-1238-9438
uzb@hikvision.ru

Hikvision Indonesia
T +62-21-2933759
Sales.Indonesia@hikvision.com

Hikvision Thailand
T +662-275-9949
sales.thailand@hikvision.com

Hikvision Malaysia
T +601-7652-2413
sales.my@hikvision.com

Hikvision Vietnam
T +84-974270888
sales.vt@hikvision.com

Hikvision Hong Kong
T +852-2151-1761
info.hk@hikvision.com

Hikvision Colombia
sales.colombia@hikvision.com

© Hikvision Digital Technology Co., Ltd. 2020 | Data subject to change without notice |