DS-2CD2955FWD-I(S)
5 MP Network Fisheye Camera

Key Features

- Up to 5 megapixel high resolution
- 2560×1920 @30fps
- H.265, H.265+, H.264+, H.264
- Support 14 display modes
- FOV: horizontal field of view 180°, vertical field of view 180°
- Dual video streams
- Digital Noise Reduction
- Support on-board storage, up to 128 G
- DC12V & PoE (802.3af)
- Up to 8 m IR range
- -S: Audio/Alarm IO
- Mobile Monitoring via Hik-Connect or iVMS-4500

Specification

Camera	
Image Sensor	1/2.5" Progressive Scan CMOS
Min. Illumination	Color: 0.01Lux @ (F1.2, AGC ON), 0 Lux with IR on
Shutter Speed	1/3 s to 1/100,000 s
Lens	1.05 mm @ F2.2, horizontal field of view: 180°, vertical field of view: 180°
Lens Mount	M12
Day &Night	IR cult filter with auto switch
DNR	3D DNR
Wide Dynamic Range	120 dB
Compression Standard	
Video Compression	Main stream: H.265/H.264 Sub stream: H.265/H.264/MJPEG
H.264 Type	Main Profile/High Profile
H.264+	Support
H.265 Type	Main Profile
H.265+	Support
Video Bit Rate	32 Kbps to 16 Mbps
Audio Compression (-S)	G.711/G.722.1/G.726/MP2L2
Audio Bit Rate (-S)	64Kbps(G.711)/16Kbps(G.722.1)/16Kbps(G.726)/32-128Kbps(MP2L2)
Image	
Max. Resolution	2560 × 1920
Main Stream Max. Frame Rate	50Hz: 25fps (2560 × 1920, 2048 × 1536, 1280 × 960) 60Hz: 30fps (2560 × 1920, 2048 × 1536, 1280 × 960)
Sub Stream Max. Frame Rate	50Hz: 25fps (352× 288, 704 × 576) 60Hz: 30fps (352 × 240, 704 × 576)
Image Settings	Saturation, brightness, contrast, and sharpness are adjustable via client software or web browser
Image Enhancement	WDR/3D DNR/Backlight Compensation/Defog
Day/Night Switch	Auto/Schedule/Triggered by Alarm In (-S model supports)
Region of Interest	Support 1 fixed region for each stream
Lens Distortion Correction	Support
Target Cropping	Support
Live View Display	
Mount Type	Support table, wall, and ceiling
Display Mode	Support 14 display modes in total (including display modes of different mount types): Fisheye View, 180 Panorama View, 4PTZ, Fisheye + 3PTZ, 360 Panorama View, 360 Panorama + PTZ, 360 Panorama + 3PTZ, 360 Panorama + 6PTZ, 360 Panorama + 8PTZ, 2PTZ, Fisheye + 8PTZ, Panorama View, Panorama + 3PTZ, Panorama + 8PTZ
Audio (-S)	
Environment Noise Filtering	Support
Audio I/O	Support
Sampling Rate	Max. 48kHz
Network	
Network Storage	NAS (Support NFS,SMB/CIFS), built-in microSD/SDHC/SDXC card slot, up to 128 G, ANR

Alarm Trigger	Video tampering alarm, HDD full, HDD error, network disconnected, IP address conflicted, illegal login
Detection	Motion detection, dynamic analysis, intrusion detection, line crossing detection
Protocols	TCP/IP, ICMP, HTTP, HTTPS, FTP, DHCP, DNS, DDNS, RTP, RTSP, RTCP, PPPoE, NTP, UPnP, SMTP, SNMP, IGMP, 802.1X, QoS, IPv6
Standard	ONVIF (PROFILE S, PROFILE G), PSIA, CGI, ISAPI
General Function	One-key reset, anti-flicker, fassword protection, privacy mask, IP Address filtering, heartbeat, watermark
Interface	
Communication Interface	1 RJ45 10M/100M self-adaptive Ethernet port
Audio (-S)	1 audio input (line in), 1 audio output interface
Alarm (-S)	1 alarm input, 1 alarm output (DC24V, 1A or AC110V, 500mA, max.)
On-board Storage	Built-in microSD/SDHC/SDXC slot, up to 128 G
General	
Operating Conditions	-10 °C to +50 °C (-14 °F to +122 °F), Humidity 95% or less (non-condensing)
Power Supply	DC 12V ± 25%, 2A, 5W PoE(802.3af 36-57V, class 3), 0.4 – 0.7 A, 6.7W
IR Range	Up to 8 m
Dimensions	Φ 119.9 × 41.2 mm (Φ 4.72" × 1.62")
Weight	600 g (1.32 lbs.)

Available Models

DS-2CD2955FWD-I, DS-2CD2955FWD-IS

With –S model: supports 1 audio input, 1 audio output, 1 alarm input, 1 alarm output.

Dimensions

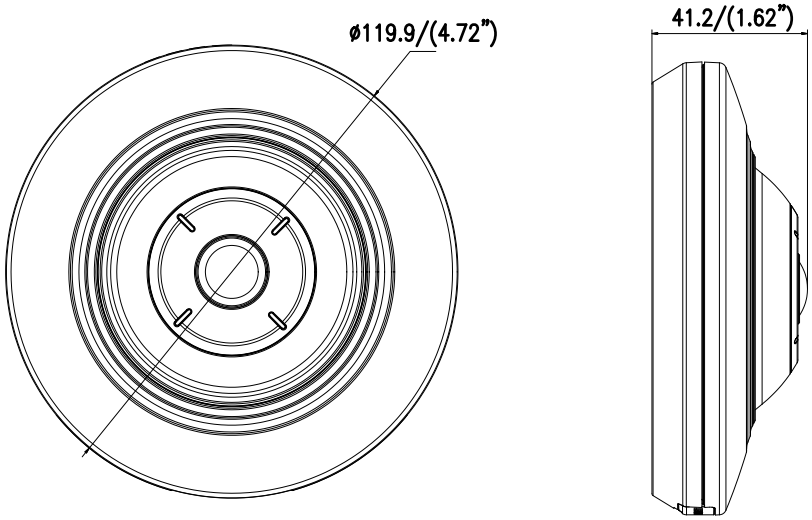

Unit: mm(inch)

Accessories

DS-1294ZJ
Wall mount

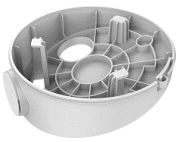

DS-1281ZJ-DM27
Inclined ceiling mount

DS-1297ZJ
Pendant mount
(extendable)

DS-1299ZJ
Pendant mount

Distributed by

S.E.A SALES & SERVICES (S) PTE LTD
362 Upper Paya Lebar Road, #02-14 Da Jin Factory Building, Singapore 534963
(65) 6926 7688 (65) 6926 7689
info@seasingapore.com.sg
www.seasingapore.com.sg

S.E.A South East Asia Group

One Stop Solutions Provider

Headquarters
No.555 Qianmo Road, Binjiang District,
Hangzhou 310051, China
T +86-571-8807-5998
overseasbusiness@hikvision.com

Hikvision USA
T +1-909-895-0400
sales.usa@hikvision.com

Hikvision Europe
T +31-23-55-42-770
info.eu@hikvision.com

Hikvision Middle East
T +971-4-8816086
salesme@hikvision.com

Hikvision Russia
T +7-495-669-67-99
saleru@hikvision.com

Hikvision India
T +91-22-28469900
sales@pramahikvision.com

Hikvision Italy
T +39-0438-6902
info.it@hikvision.com

Hikvision France
T +33(0)1-85-330-450
info.fr@hikvision.com

Hikvision Spain
T +34-91-737-16-55
info.es@hikvision.com

Hikvision Poland
T +48-22-460-01-50
poland@hikvision.com

Hikvision UK
T +01628-902140
support.uk@hikvision.com

Hikvision Singapore
T +65-6684-4718
sg@hikvision.com

Hikvision Oceania
T +61-2-8599-4233
salesau@hikvision.com

Hikvision Canada
T +1-909-895-0400
sales.usa@hikvision.com

Hikvision Korea
T +82-31-731-8841
sales.korea@hikvision.com

Hikvision Brazil
T +55 11 3318-0050
Latam.support@hikvision.com

Hikvision Africa
T +27 (10) 0351172
sale.africa@hikvision.com

Hikvision Hong Kong
T +852-2151-1761

© Hikvision Digital Technology Co., Ltd. 2016 | Data subject to change without notice | 05040220161123